Work Order ID 50132

July 8, 2009 12:50:38 PM

Item ID: D412-664-203TRN

Revision ID: D

Item Name: Crosstube Turning Detail

Accept **Setup** **Start** **Stop**

Start Date: 7/10/09 **Start Qty:** 1.00

Required Date: 7/17/09 **Req'd Qty:** 1.00

Cust Item ID:

Customer:

Reference:

Approvals: **Process Plan:** ✓ **Date:** **Tooling:** **Date:**

QC: **Date:** **SPC (Y/N):** **Date:**

Run **Start** **Stop**

Sequence ID/ Work Center ID	Operation Description	Set Up/ Run Hours	Draw Number	Draw Rev.	Plan Code	Accept Qty	Reject Qty	Reject Number	Insp. Stamp

Draw Nbr	Revision Nbr
D412-664-243	Rev D

100 — 0.00

Mori Seiki

MORI SEIKI CNC LATHE LARGE

Mori Seiki CNC Lathe Large

Memo 0.00

1-Fill tube with sand & install plugs DT8534 on both ends as per Folio FA166□2-Turn first side as per Folio FA166□3- File transition lines smooth.

a.m 09-07-09 ①

110 — QC1- Inspect dimensions to dimension sheet — 0.00

QC

Quality Control

Memo 0.00

a.m 09-07-09 ④

120 — 0.00

Mori Seiki

MORI SEIKI CNC LATHE LARGE

Mori Seiki CNC Lathe Large

Memo 0.00

1-Turn second side as per Folio FA166□2- File transition lines smooth.□3- Remove sand and plugs□4-Scribe part # and batch # using vibrating stilus

a.m 09-07-09 ①

Work Order ID 50132

July 8, 2009 12:50:38 PM

Item ID: D412-664-203TRN
Revision ID: D
Item Name: Crosstube Turning Detail

Accept

Setup Start
Stop

Start Date: 7/10/09 **Start Qty:** 1.00
Required Date: 7/17/09 **Req'd Qty:** 1.00
Reference:

Cust Item ID:
Customer:

Approvals: **Process Plan:** _____ **Date:** _____ **Tooling:** _____ **Date:** _____
QC: _____ **Date:** _____ **SPC (Y/N):** _____ **Date:** _____

Run Start
Stop

Sequence ID/ Work Center ID	Operation Description	Set Up/ Run Hours	Draw Number	Draw Rev.	Plan Code	Accept Qty	Reject Qty	Reject Number	Insp. Stamp
130	QC1- Inspect dimensions to dimension sheet	0.00							
QC	Memo	0.00				Q.M	09-07-09 (1)		
Quality Control									
140	QC8- Inspect parts - second check	0.00							
QC	Memo	0.00				2)	8 09/07/10 (4)		
Quality Control									
150	Crosstubes Chemical Conversion	0.00							
HandFXtube	Memo	0.00				Q.M	09-07-10 (1)		
Hand Finishing Crosstubes									

Work Order ID 50132

July 8, 2009 12:50:38 PM

Item ID: D412-664-203TRN
Revision ID: D
Item Name: Crosstube Turning Detail

Accept

Setup Start
Stop

Start Date: 7/10/09 **Start Qty:** 1.00
Required Date: 7/17/09 **Req'd Qty:** 1.00
Reference:

Cust Item ID:
Customer:

Run Start
Stop

Approvals: **Process Plan:** _____ **Date:** _____ **Tooling:** _____ **Date:** _____
QC: _____ **Date:** _____ **SPC (Y/N):** _____ **Date:** _____

Sequence ID/ Work Center ID	Operation Description	Set Up/ Run Hours	Draw Number	Draw Rev.	Plan Code	Accept Qty	Reject Qty	Reject Number	Insp. Stamp
160	QC3- Inspect Part Finish	0.00							
QC	**Memo**	0.00							
Quality Control									
170		0.00							
Packaging	Packaging								
Packaging	**Memo**	0.00							
	Identify and stock in kanban rack☐Location:								
180	QC21- Final Inspection - Work Order Release	0.00							
QC	**Memo**	0.00							
Quality Control									

DP 9-7-13

X-tube cel
MB-09-07-13

09/07/13

u 09.07.13

Picklist Print

July 8, 2009 12:50:37 PM

Work Order ID: 50132

Parent Item: D412-664-203TRNRevD

Parent Item Name: Crosstube Turning Detail

Start Date: 7/10/09 **Required Date:** 7/17/09

Comments:

Start Qty: 1.00 **Required Qty:** 1.00

Component Item ID/ Item Name	Replacement Item ID	Mfg/ Purch	Bin Item	Primary Location	Last Location	Route Seq ID	Unit of Measure	Qty on Hand	Remaining Qty To Pick	Qty Issued	Date Issued	Status
D6009-129RevA Crosstube Material		Manufactured	No			120	Each	26.0000	1.0000	G.m	09.07.09	

Warehouse Location	Loc Qty	Loc Code
Main Warehouse		
LG	26	
34691	7	
38342	19	

DART AEROSPACE LTD	Work Order:	50132
Description: Crosstube Assembly (412 High Aft)	Part Number:	D412-664-243
Inspection Dwg: D412-664-243 **Rev:** D		Page 1 of 1

FIRST ARTICLE INSPECTION CHECKLIST

[X] First Article [ ] Prototype

	Inspection Sheet Drawing Dimension	Tolerance	Actual Dimension	Accept	Reject	Method of Inspection	Comments
SIDE A	2.684	+0.005/-0.000	2.689	✓			
	2.748	+0.005/-0.000	2.753	✓			
	2.884	+0.005/-0.000	2.889	✓			
	3.019	+0.005/-0.000	3.024	✓			
	3.163	+0.005/-0.000	3.167	✓			
	3.308	+0.005/-0.000	3.313	✓			
	3.429	+0.005/-0.000	3.432	✓			
	2.990	+0.005/-0.000	2.992	✓			
	2.618	+0.005/-0.000	2.623	✓			
	0.200	+/-0.010	0.200	✓			
	R0.063	+/-0.010	R0.063	✓			
	R0.500	+/-0.010	R0.500	✓			
	4.971	+/-0.030	4.971	✓			
SIDE B	2.684	+0.005/-0.000	2.689	✓			
	2.748	+0.005/-0.000	2.753	✓			
	2.884	+0.005/-0.000	2.889	✓			
	3.019	+0.005/-0.000	3.024	✓			
	3.163	+0.005/-0.000	3.167	✓			
	3.308	+0.005/-0.000	3.313	✓			
	3.429	+0.005/-0.000	3.432	✓			
	2.990	+0.005/-0.000	2.994	✓			
	2.618	+0.005/-0.000	2.623	✓			
	0.200	+/-0.010	0.200	✓			
	R0.063	+/-0.010	R0.063	✓			
	R0.500	+/-0.010	R0.500	✓			
	4.971	+/-0.030	4.971	✓			
	124.09	+/-0.020	124.090	✓			

Measured by:	A.M	Audited by:	S	Prototype Approval:	N/A
Date:	09.07.09	Date:	09/07/10	Date:	N/A

Rev	Date	Change	Revised by	Approved
A	04.06.16	New Issue (P/O D412-664-203)	KJ/JLM	
B	06.03.09	Dwg Rev updated	KJ/JLM	
C	07.05.08	Tolerance updated for dimension 4.971	KJ/JLM	

DESIGN	DRAWN BY	DART AEROSPACE LTD HAWKESBURY, ONTARIO, CANADA
PH	PH	
CHECKED	APPROVED	DRAWING NO. REV. D
		D412-664-243 SHEET 1 OF 3
DATE		TITLE SCALE
07.03.09		CROSSTUBE ASSEMBLY (412 HI AFT) NTS

A	01.10.17	NEW ISSUE
B	05.02.04	ADD HOLES FOR COMPATABILITY WITH BHT/AA SKIDTUBES
C	06.10.27	REMOVE D2856-600-1087, ADD D2732-058 & MAGNOBOND 6398 MS21920-32 WAS MS21920-30
D	07.03.09	REMOVE D2732-058, CHANGE TO D3595-063-570

RELEASED
07.04.24

Qty	Part Number	Description
X	**D412-664-243**	**CROSSTUBE ASSEMBLY (412 HIGH AFT)**
1	D6009-129	CROSSTUBE
2	D3595-063-570	RUBBER CUSHION
1	D2896-1	SUPPORT
2	D2856-600-1009	ABRASION STRIP
4	MS21920-28	CLAMP
2	MS21920-30	CLAMP (OR MS21920-32)
2	D3189-1	CHAFING SHIELD
A/R	MAGNOBOND 6398	ROCKWELL SPECIFICATION RBO-120-023 ADHESIVE (TEXTRON/BELL SPEC. 299-947-100, TYPE II, CLASS 2 ADHESIVE)

WO 5032

GENERAL NOTES:

1) TOLERANCES ARE PER DART QSI 018 UNLESS OTHERWISE NOTED.
2) MATERIAL: MANUFACTURED FROM D6009-129
   FINISHED LENGTH = 124.09±0.020
3) FINISH: CHEMICAL CONVERSION COAT PER DART QSI 005 4.1
   PRIME INSIDE AND OUTSIDE PER DART QSI 005 4.2
   PAINT OUTSIDE PER DART 005 4.2
4) PART IS SYMMETRIC ABOUT CENTERLINE.
5) RUN-OFF PART. BLEND OUT EDGE LONGITUDINALY, TRANSITION SHOULD BE SMOOTH.
6) BEND PROGRESSIVELY WITH A MINIMUM OF 8 PASSES. MAXIMUM TUBE FLATTENING DUE TO BENDING IS 6% BASED ON O.D.
7) LIQUID PENETRANT INSPECT OUTSIDE SURFACE OF CROSSTUBE PER QSI 038.
8) SCRIBE DART PART NUMBER AND BATCH NUMBER IN THIS AREA WITH VIBRATING STYLUS.
9) INSTALL D2856-600-1009 ABRASION STRIP WITH A 0.13 (REF) GAP ON BOTTOM SIDE OF CROSSTUBE PER QSI 035.
10) EXTREME CARE MUST BE TAKEN TO PROTECT THE OUTSIDE SURFACE OF THE TUBE. THE OUTSIDE SURFACE MUST BE SMOOTH AND FREE FROM SURFACE DEFECTS SUCH AS SCRATCHES, NICKS, OR DENTS. DEFECTS UP TO 0.005" MAY BE BLENDED OUT LONGITUDINALLY. CIRCUMFERENTIAL GRIND MARKS ARE UNACCEPTABLE.
11) APPLY A 0.03" TO 0.06" THICK LAYER OF MAGNOBOND 6398 TO THE SURFACE OF D2896-1 THAT WILL BE IN CONTACT WITH THE CROSSTUBE PER QSI 015. LET CURE FOR 12 HOURS AFTER INSTALLATION AND PRIOR TO PACKAGING.
12) INSTALL MS21920-30 CLAMPS (OR -32) WITH D3595-063-570 RUBBER CUSHIONS TO SECURE D2896-1 SUPPORT ON TOP SIDE OF THE CROSSTUBE. ENSURE CLAMPS ARE OPPOSITE CROSSTUBE SUPPORT.
13) TORQUE CLAMPS 80 TO 100 IN-LB. ENSURE AT LEAST 1.5 THREADS SHOWING IN SAFETY AND THAT NUT HAS NOT BOTTOMED-OUT AFTER TORQUING.

Copyright © 2001 by DART AEROSPACE LTD
THIS DOCUMENT IS PRIVATE AND CONFIDENTIAL AND IS SUPPLIED ON THE EXPRESS CONDITION THAT IT IS NOT TO BE USED FOR ANY PURPOSE OR COPIED OR COMMUNICATED TO ANY OTHER PERSON WITHOUT WRITTEN PERMISSION FROM DART AEROSPACE LTD.

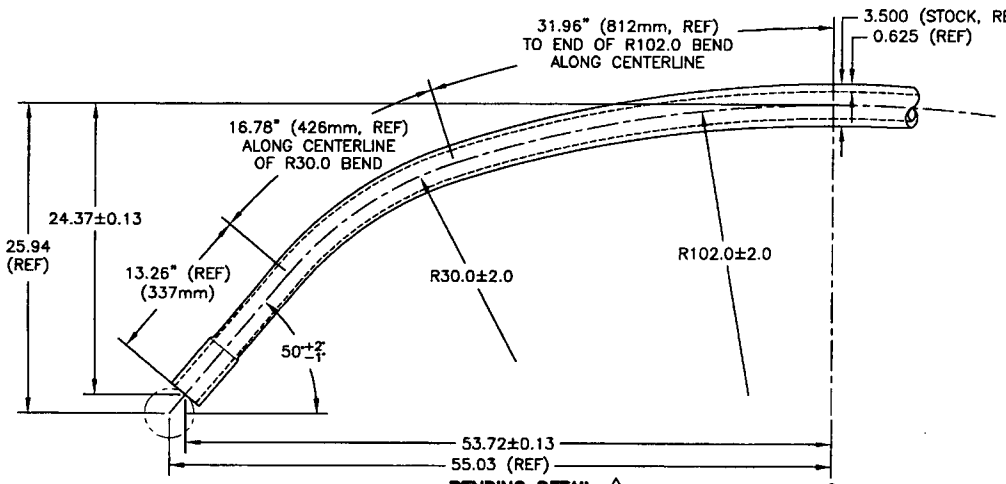

BENDING DETAIL 6
SCALE 1:10

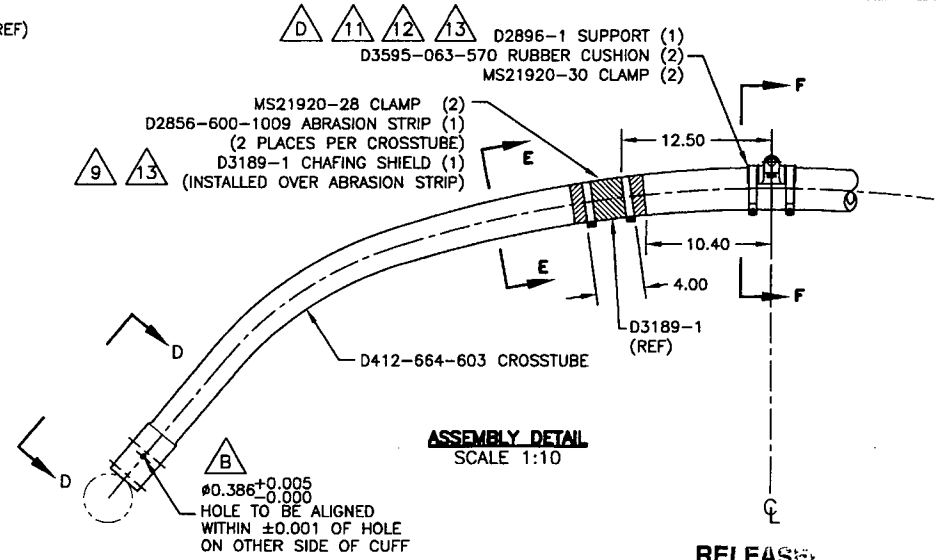

ASSEMBLY DETAIL
SCALE 1:10

RELEASED
07.04.24

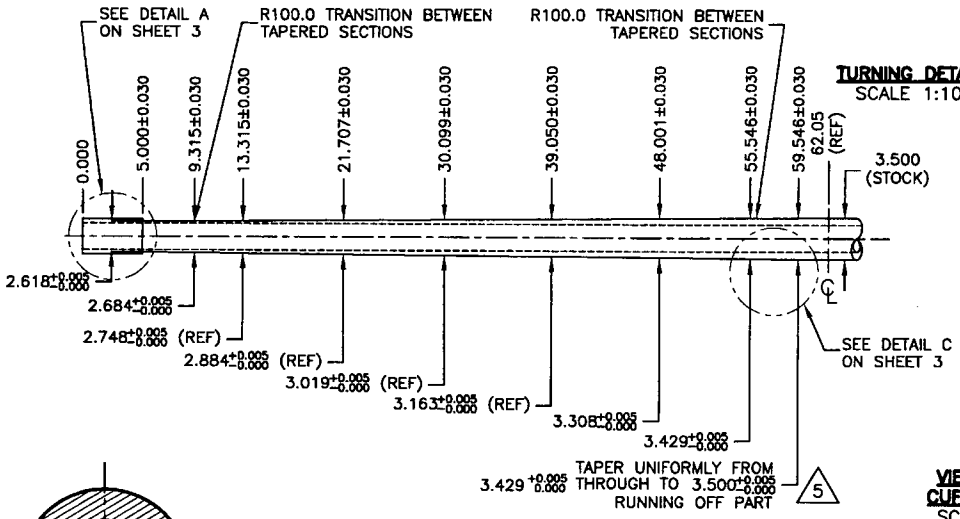

TURNING DETAIL
SCALE 1:10

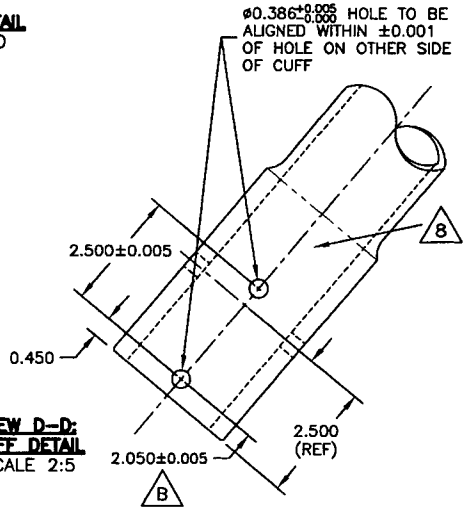

VIEW D–D: CUFF DETAIL
SCALE 2:5

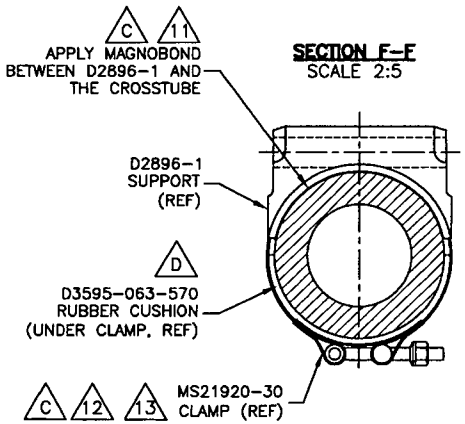

SECTION F–F
SCALE 2:5

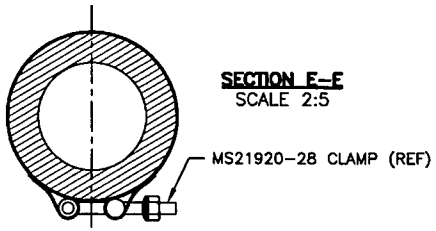

SECTION E–E
SCALE 2:5

COPYRIGHT © 2001 BY DART AEROSPACE LTD.

THIS DOCUMENT IS PRIVATE AND CONFIDENTIAL AND IS SUPPLIED ON THE EXPRESS CONDITION THAT IT IS NOT TO BE USED FOR ANY PURPOSE OR COPIED OR COMMUNICATED TO ANY OTHER PERSON WITHOUT WRITTEN PERMISSION FROM DART AEROSPACE LTD.

DESIGN: PH	DRAWN BY: PH	DART	DART AEROSPACE LTD. HAWKESBURY, ONTARIO, CANADA
CHECKED: GP	APPROVED:	DRAWING NO. D412-664-243	REV. D SHEET 2 OF 3
DATE: 07.03.09		TITLE: CROSSTUBE ASSEMBLY (412 HI AFT)	SCALE 1:10

RELEASED 07.04.24 PER ECN 889

DETAIL A: CROSSTUBE CUFF

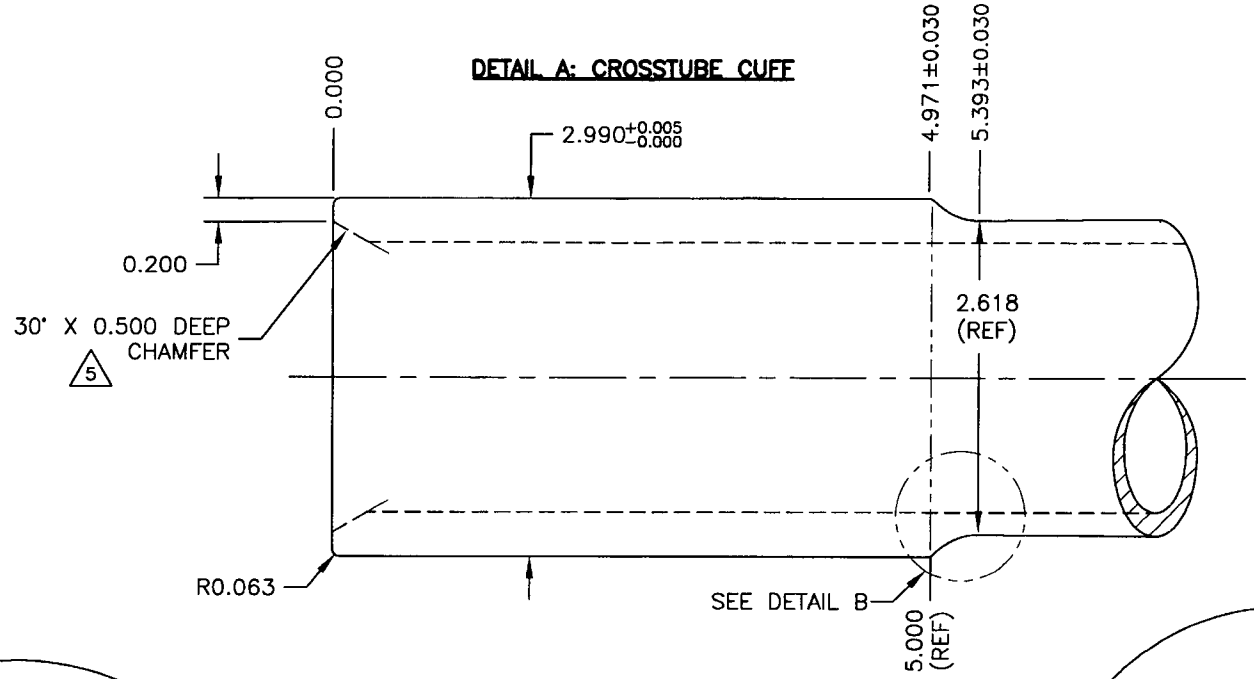

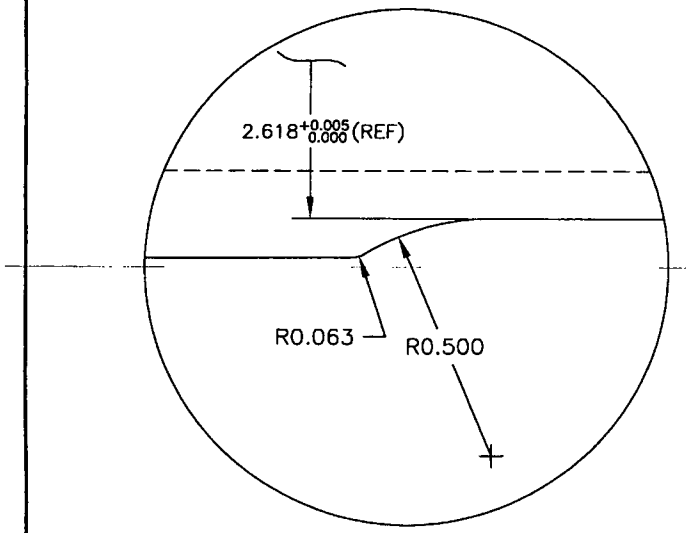

DETAIL B: CUFF TRANSITION
SCALE 4:1

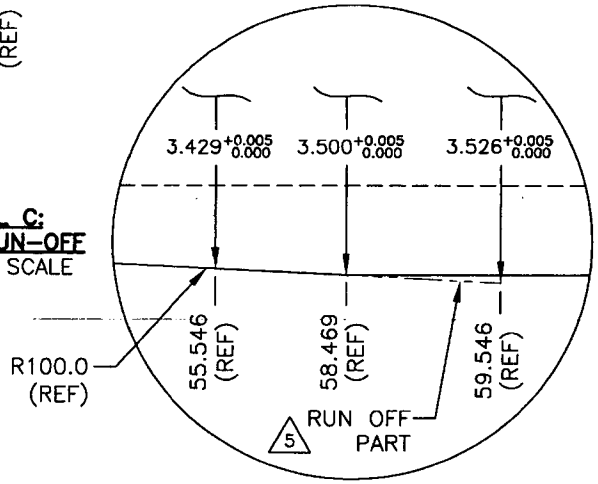

DETAIL C: TAPER RUN-OFF
NOT TO SCALE

COPYRIGHT © 2001 BY DART AEROSPACE LTD.

THIS DOCUMENT IS PRIVATE AND CONFIDENTIAL AND IS SUPPLIED ON THE EXPRESS CONDITION THAT IT IS NOT TO BE USED FOR ANY PURPOSE OR COPIED OR COMMUNICATED TO ANY OTHER PERSON WITHOUT WRITTEN PERMISSION FROM DART AEROSPACE LTD.

DESIGN PH	DRAWN BY PH	DART	DART AEROSPACE LTD. HAWKESBURY, ONTARIO, CANADA
CHECKED	APPROVED	DRAWING NO. D412-664-243	REV. D SHEET 3 OF 3
DATE 07.03.09		TITLE CROSSTUBE ASSEMBLY (412 HI AFT)	SCALE 1:1